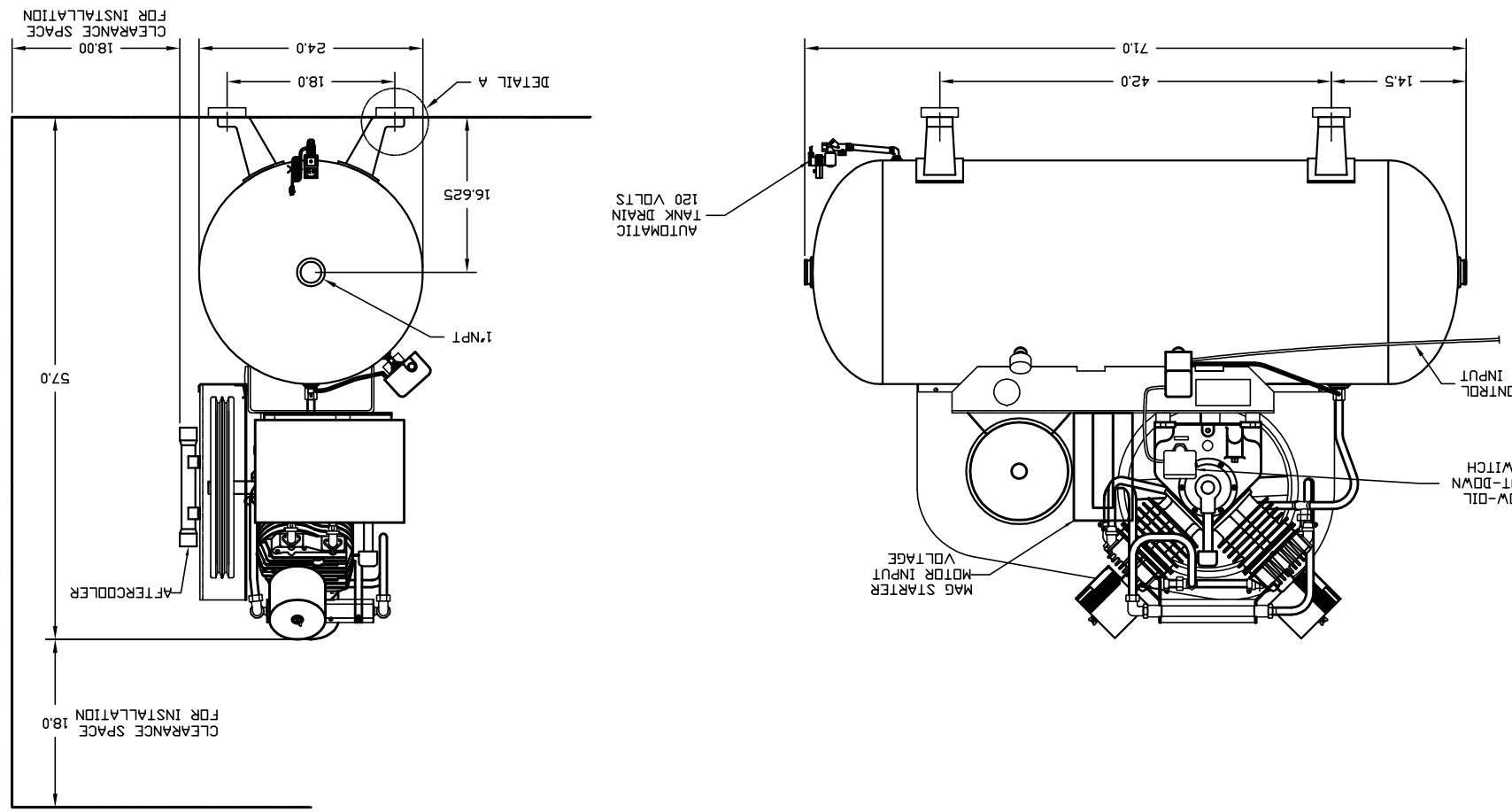

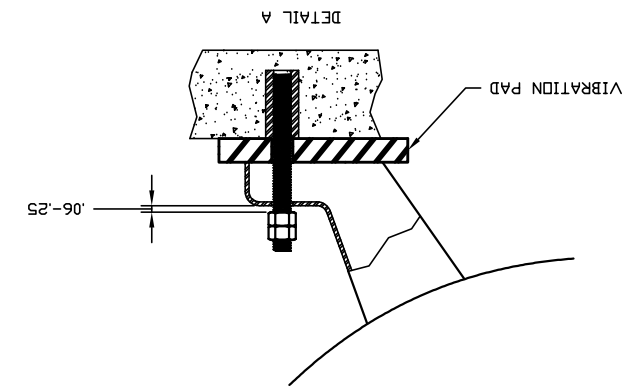

NOTES:

1. SPECIFICATIONS AND DIMENSIONS ARE SUBJECT TO CHANGE WITHOUT NOTICE OR OBLIGATION.
2. AMBIENT AIR TEMPERATURE SHOULD NOT EXCEED 100°F.
3. USE VIBRATION PADS ON A FLAT, CONCRETE FLOOR.
4. USE CONCRETE ANCHORS BUT DO NOT DRAW BOLTS TIGHT TO ALLOW VIBRATION PADS TO FUNCTION.
5. AIR RECEIVER CONSTRUCTED TO ASME CODE AND HAS CRN.

SYMBOL LEGEND		
⊖ = MINUS DRAFT	⊘ = ADDITIONAL CONTROL	TOLERANCES NOT SPECIFIED
⊕ = PLUS DRAFT	⊕ = BRINELL HARDNESS	.X ±0.020"
	REQ'D	.XX ±0.010"
	△ = REVISION NOTE	.XXX ±0.005"
		∠(DEG.) ±2°

SHEET 1 OF 1	DO NOT SCALE DRAWING FOR DIMENSIONS	UNITS INCHES
	REFERENCE N/A	PLOT SCALE 1:8
	DRAWN BLH 10/15/09	CHECKED WAB 10/16/09
	BY	BY WAB 10/16/09
	APPROVED	

CONFIDENTIAL DISCLOSURE
THIS DRAWING IS THE PROPERTY OF CAMPBELL HAUSFELD/SCOTT FETZER COMPANY AND SUBJECT TO RETURN ON DEMAND. ITS CONTENTS ARE CONFIDENTIAL AND MUST NOT BE COPIED OR SUBMITTED TO OUTSIDE PARTIES FOR USE OR EXAMINATION.

MATERIAL NOTED

PART NAME 15 HP 120 GAL FULLY PACKAGED HORIZONTAL COMPRESSOR

CAMPBELL HAUSFELD/SCOTT FETZER COMPANY
100 MAGNETIC DRIVE, HARRISON, OHIO 45030
PHONE: (513) 367-4811 FAX: (513) 367-3176 WWW.CAMPBELLHAUSFELD.COM

AUTOCAD FILE | DWG NO UA0112 | SIZE D

REV	ZONE	REVISION	DATE	ECN	PR/MDR	REV BY	CHKD BY	APPD BY
B1		RELEASE FOR PRODUCTION	10/15/09	22115	N/A	BLH	WAB	WAB