NOTES:

1. SPECIFICATIONS AND DIMENSIONS ARE SUBJECT TO CHANGE WITHOUT NOTICE OR OBLIGATION.
2. AMBIENT AIR TEMPERATURE SHOULD NOT EXCEED 100°F.
3. USE VIBRATION PADS ON A FLAT, CONCRETE FLOOR.
4. USE CONCRETE ANCHORS BUT DO NOT DRAW BOLTS TIGHT TO ALLOW VIBRATION PADS TO FUNCTION.
5. AIR RECEIVER CONSTRUCTED TO ASME CODE AND HAS CRN.

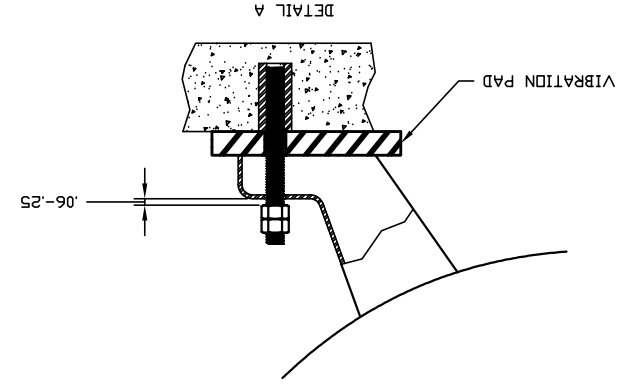

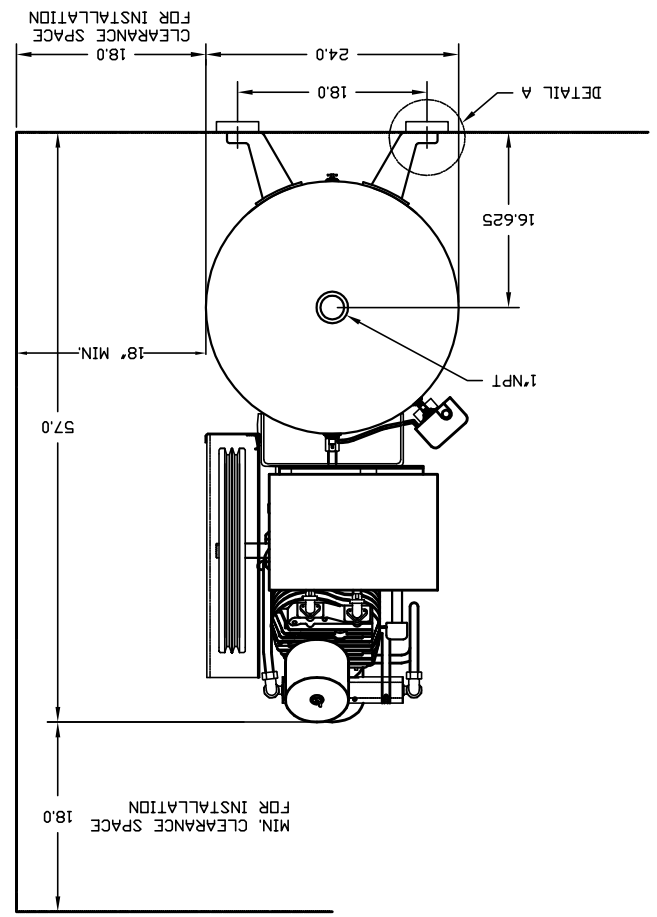

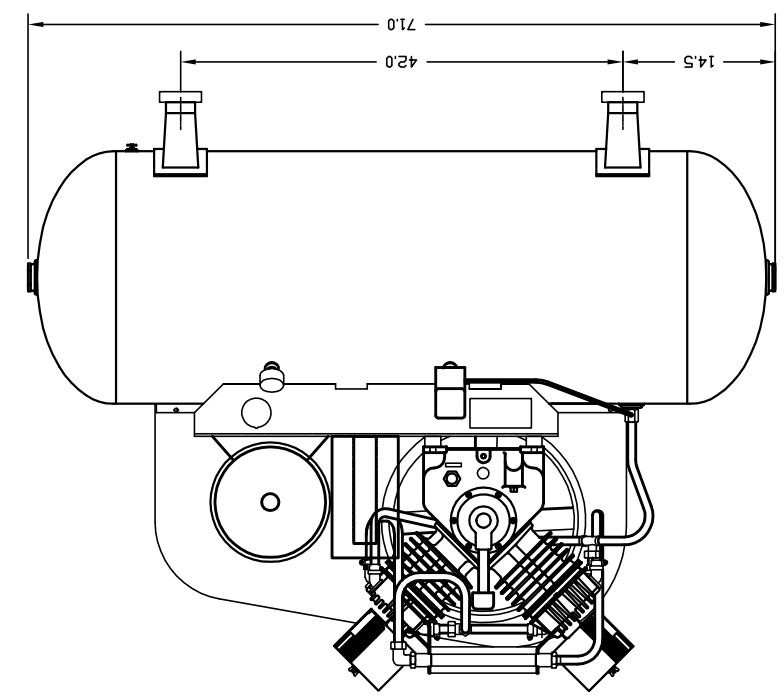

REV	ZONE	REVISION	DATE	ECN	PR/MDR	REV BY	CHKD BY	APPD BY
B1		RELEASE FOR PRODUCTION	9/10/09	9/11/09	N/A	BLH	VAB	VAB

SYMBOL LEGEND
⊖ = MINUS DRAFT
⊕ = PLUS DRAFT
= ADDITIONAL CONTROL
= BRINELL HARDNESS
REQ'D
= REVISION NOTE

TOLERANCES NOT SPECIFIED
.X ±0.020"
.XX ±0.010"
.XXX ±0.005"
∠(DEG.) ±2°

SHEET 1 OF 1 | DO NOT SCALE DRAWING FOR DIMENSIONS | UNITS INCHES

REFERENCE N/A | PLOT SCALE 1:8

CONFIDENTIAL DISCLOSURE
THIS DRAWING IS THE PROPERTY OF CAMPBELL HAUSFELD/SCOTT FITZER COMPANY AND SUBJECT TO RETURN ON DEMAND. ITS CONTENTS ARE CONFIDENTIAL AND MUST NOT BE COPIED OR SUBMITTED TO OUTSIDE PARTIES FOR USE OR EXAMINATION.

	BY	BY	BY
	DRAWN	CHECKED	APPROVED
	BLH	WAB	WAB
	9/10/09	9/11/09	9/11/09

MATERIAL NOTED

PART NAME 15 HP 120 GAL HORIZONTAL COMPRESSOR

CAMPBELL HAUSFELD/SCOTT FITZER
100 MAGNETIC DRIVE, HARRISON, OHIO 45030
PHONE: (513) 367-4811 FAX: (513) 367-3276 WWW.CAMPBELLHAUS.COM

AUTOCAD FILE | DWG NO UA0103 | SIZE D