REV	ZONE	REVISION	DATE	ECN	PR/MOR	REV BY	CHKD BY	APPD BY
B1		RELEASE FOR PRODUCTION	11/25/09	22115	N/A	BLH	WAB	WAB

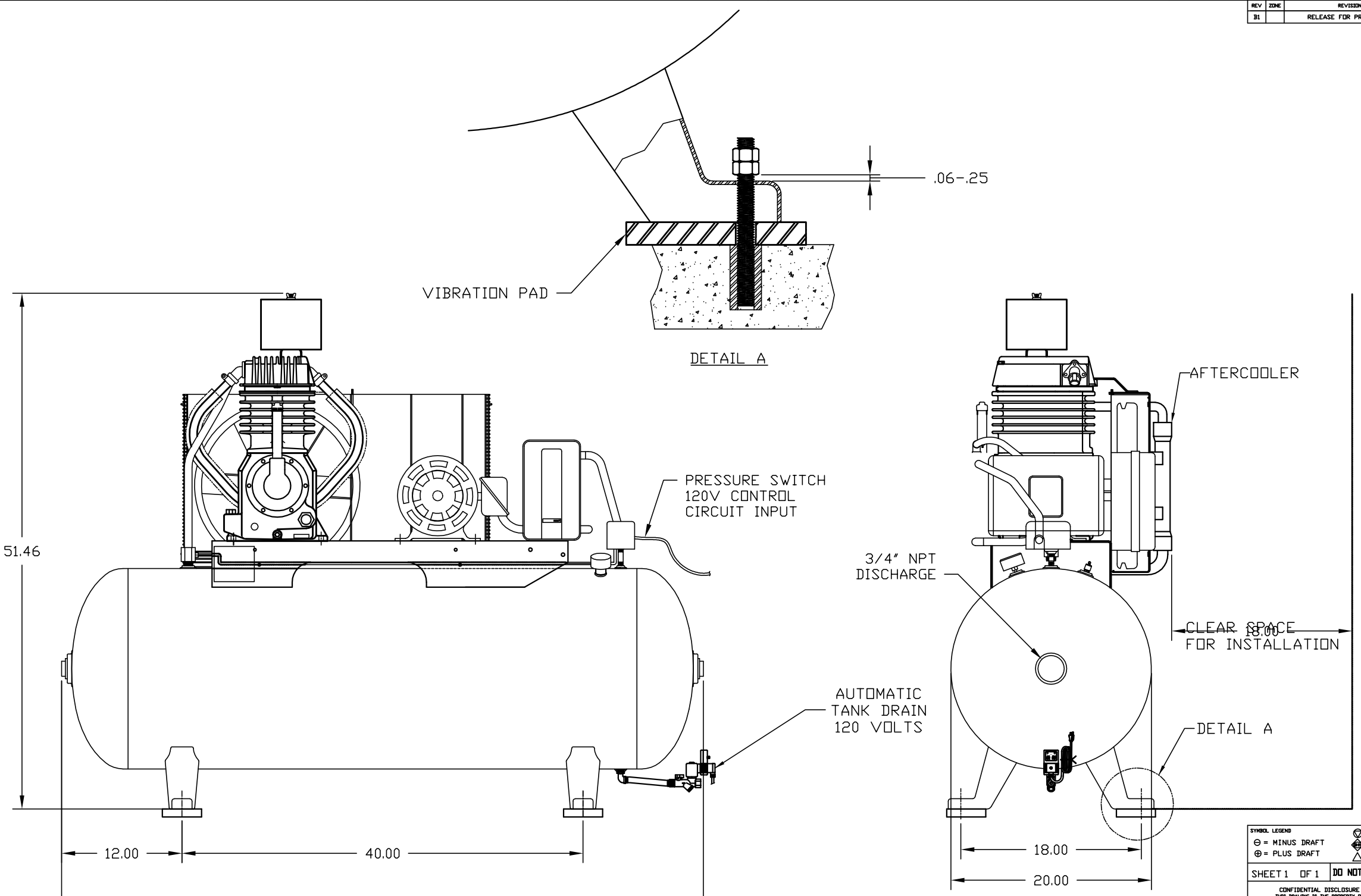

SYMBOL LEGEND
⊖ = MINUS DRAFT
⊕ = PLUS DRAFT
= ADDITIONAL CONTROL REQ'D
= BRINELL HARDNESS
= REVISION NOTE

TOLERANCES NOT SPECIFIED
.X ± 0.03"
.XX ± 0.010"
.XXX ± 0.005"
∠∠ DEG. > ± 2°

SHEET 1 OF 1

DO NOT SCALE DRAWING FOR DIMENSIONS

UNITS: INCHES

CONFIDENTIAL DISCLOSURE
THIS DRAWING IS THE PROPERTY OF CAMPBELL HAUSFELD/SCOTT FETZER COMPANY AND SUBJECT TO RETURN ON DEMAND. ITS CONTENTS ARE CONFIDENTIAL AND MUST NOT BE COPIED OR SUBMITTED TO OUTSIDE PARTIES FOR USE OR EXAMINATION.

REFERENCE	PLOT SCALE
N/A	1:5

DRAWN BY	CHECKED BY	APPROVED BY
BLH	WAB	WAB
11/25/09	11/25/09	11/25/09

MATERIAL: NOTED

PART NAME: 7.5 HP 80 GAL FULLY PACKAGED HORIZ. ASS'Y

CAMPBELL HAUSFELD
CAMPBELL HAUSFELD - AIR PRODUCTS
109 PRODUCTION DRIVE, HARRISON, OHIO 45030
PHONE: (513) 367-4811 FAX: (513) 367-3176 WWW.CAMPBELLHAUSFELD.COM

AUTOCAD FILE | DWG NO: UA0110 | SIZE: D