REV	ZONE	REVISION	DATE	ECN	PR/MOR	REV BY	CHKD BY	APPD BY
B1		RELEASE FOR PRODUCTION	10/08/09	22115	N/A	BLH	WAB	WAB

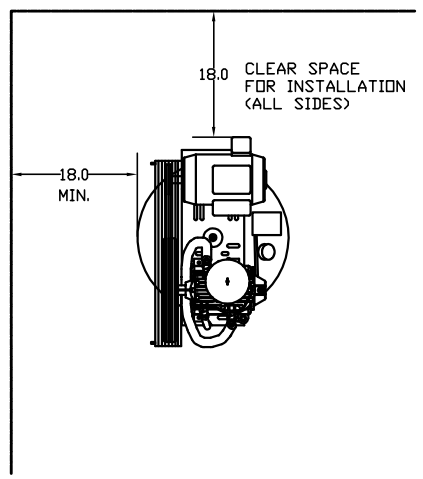

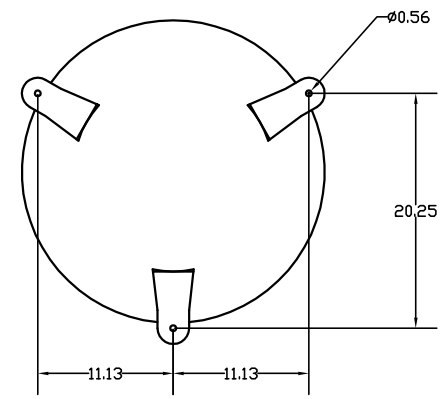

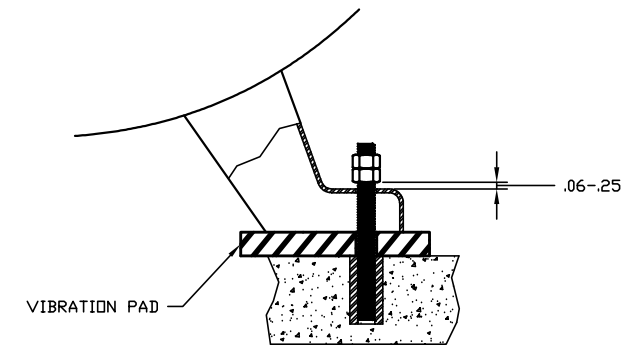

DETAIL A

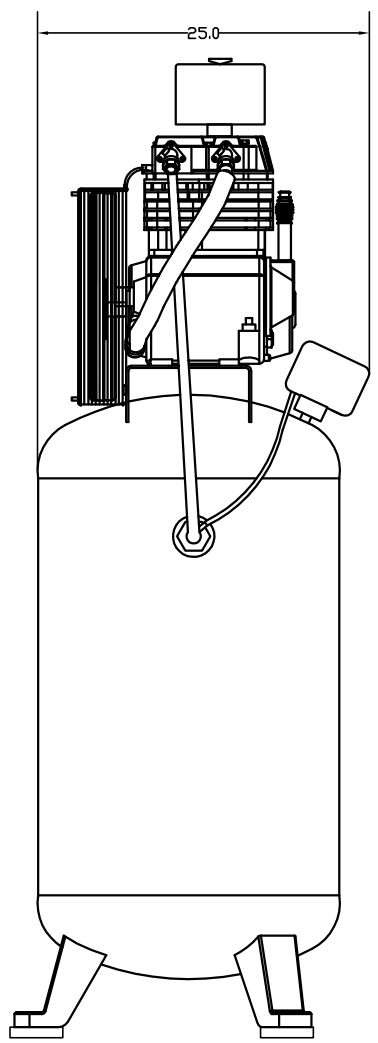

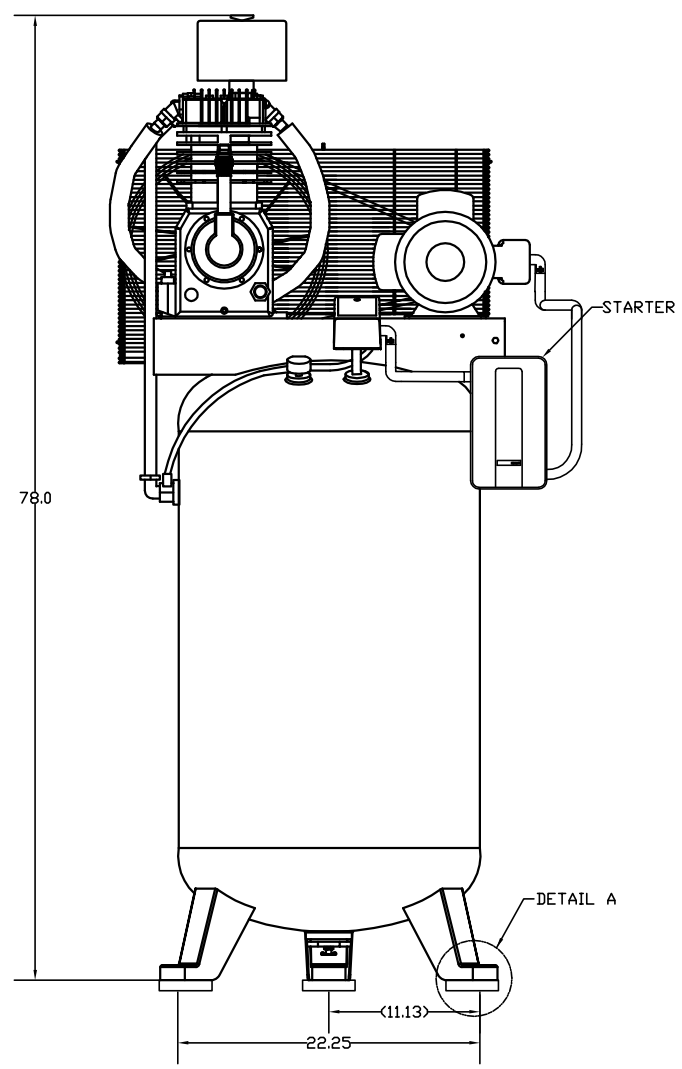

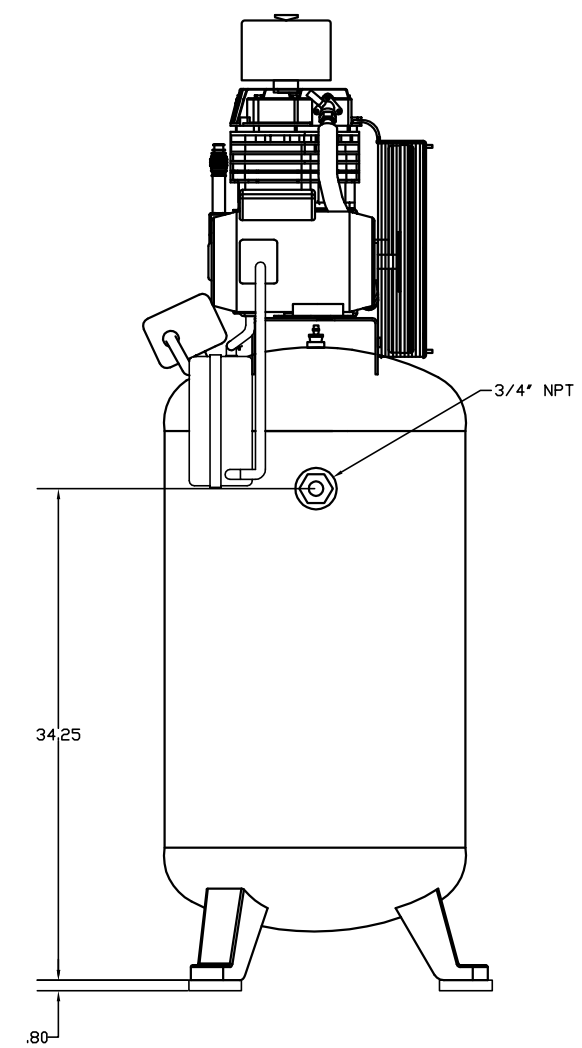

NOTES:

1. SPECIFICATIONS AND DIMENSIONS ARE SUBJECT TO CHANGE WITHOUT NOTICE OR OBLIGATION.
2. AMBIENT AIR TEMPERATURE SHOULD NOT EXCEED 100°F.
3. USE VIBRATION PADS ON A FLAT, CONCRETE FLOOR.
4. USE CONCRETE ANCHORS BUT DO NOT DRAW BOLTS TIGHT TO ALLOW VIBRATION PADS TO FUNCTION.
5. AIR RECEIVER CONSTRUCTED TO ASME CODE AND HAS CRN.

SYMBOL LEGEND
⊖ = MINUS DRAFT
⊕ = PLUS DRAFT
= ADDITIONAL CONTROL REQ'D
= BRINELL HARDNESS
△ = REVISION NOTE

TOLERANCES NOT SPECIFIED
.X ±0.03"
.XX ±0.010"
.XXX ±0.005"
∠ (DEG.) ±2°

SHEET 1 OF 1 | DO NOT SCALE DRAWING FOR DIMENSIONS | UNITS INCHES

CONFIDENTIAL DISCLOSURE
THIS DRAWING IS THE PROPERTY OF CAMPBELL HAUSFELD/SCOTT FETZER COMPANY AND SUBJECT TO RETURN ON DEMAND. ITS CONTENTS ARE CONFIDENTIAL AND MUST NOT BE COPIED OR SUBMITTED TO OUTSIDE PARTIES FOR USE OR EXAMINATION.

REFERENCE		PLOT SCALE
N/A		1:8
DRAWN BY	CHECKED BY	APPROVED BY
BLH	WAB	WAB
9/30/09	9/11/09	9/11/09

MATERIAL: NOTED

PART NAME: 80 GAL 7.5HP VERTICAL COMPRESSOR

CAMPBELL HAUSFELD
CAMPBELL HAUSFELD - AIR PRODUCTS
101 PRODUCTION DRIVE, HARRISON, OHIO 45030
PHONE: (513) 367-4811 FAX: (513) 367-3176 WWW.DAPOWDER.COM

AUTOCAD FILE | DWG NO UA0101 | SIZE D